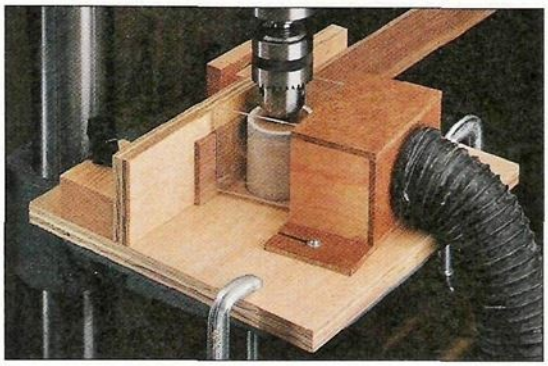

Thickness Sanding Jig

A quick way to make thin stock is to resaw a board and then sand away the marks left by the saw. (Resawing reduces the thickness of a board by cutting it into thin pieces.) The trick is to remove the marks *and* leave the stock uniform in thickness.

To solve this problem, I built this thickness sanding jig, see photo. It clamps to the drill press table and uses a drum sander to sand the workpiece. (To make your own drum sander, see page 11.)

The sanding jig consists of three main parts: a base, a fence assembly, and a dust collector.

BASE

To provide a smooth, flat surface for attaching the fence assembly and dust collector, I cut a square plywood *base (A)*, see the Exploded View.

A hole in the center of the base forms a recess for the drum sander, see Detail in Exploded View. Note: The hole is sized 1/4" larger than the sanding drum.

FENCE ASSEMBLY

Once the base is complete, the next step is to make the fence assembly, see Fig. 1. It's made up of three pieces: a plywood fence, a micro-adjuster, and a fence support, refer to Exploded View.

By adjusting the space between the fence and the drum you can sand stock up to 1/2"-thick. (Note: The width of the stock is limited by the height of the drum.)

WOODWORKING.COM

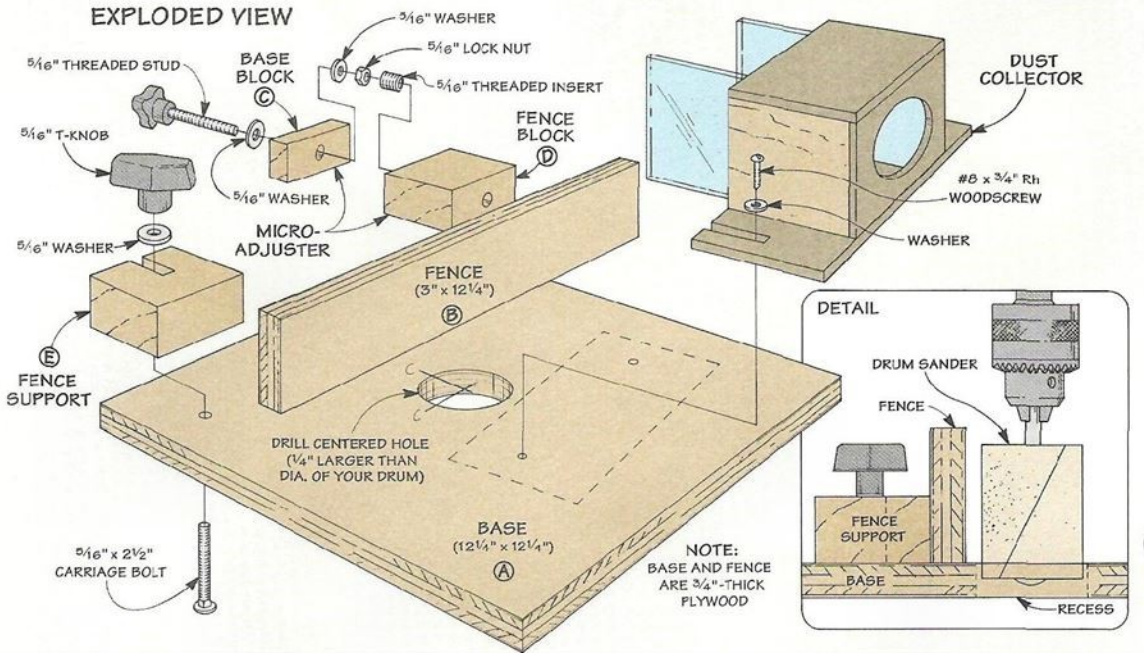

FENCE. To make the fence assembly, start by cutting a 3" tall *fence (B)* to match the width of the base (A), see Exploded View.

MICRO-ADJUSTER. Next, to "fine-tune" the space between the fence and the drum, I added a micro-adjuster behind the fence.

The micro-adjuster is made up of two blocks — a *base block (C)* and a *fence block (D)*, see Fig. 1. A threaded stud passes through the base block (C) and is held in place with a lock nut. (For sources, see page 31.) Note: You could also use a 4" eye bolt in place of the threaded stud.

The stud screws into a threaded insert in the fence block (D). When you turn the knob, it moves the fence back and forth, see Cross Section in Fig. 1.

To make the micro-adjuster, first cut a blank to size, see Fig. 1a. For the threaded stud to line up in both blocks, drill the hole first, then cut the base block (C) off the fence block (D), see Fig. 1a.

Next, screw the base block to the base. Then slide the threaded stud through the hole and thread on the lock nut. Now, install the threaded insert into the fence block (D) and glue this block to the fence, see Fig. 1.

FENCE SUPPORT. To support the other end of the fence, I added a *fence support (E)*, see Fig. 2. It's just a piece of 1½"-thick stock with a notch cut in it. The notch allows for rough positioning of the fence.

A carriage bolt and a T-knob hold this end of the fence in place. To locate the hole for this bolt, turn the micro-adjust knob until the fence block (D) pulls up tight against the lock nut, see Fig. 3.

Now locate and drill a counterbored hole in the base for the bolt in the fence support block (E). Finally, push the bolt through the base and thread on a T-knob, see Fig. 2a. (I used a plastic knob, but a wing nut will work as well.)

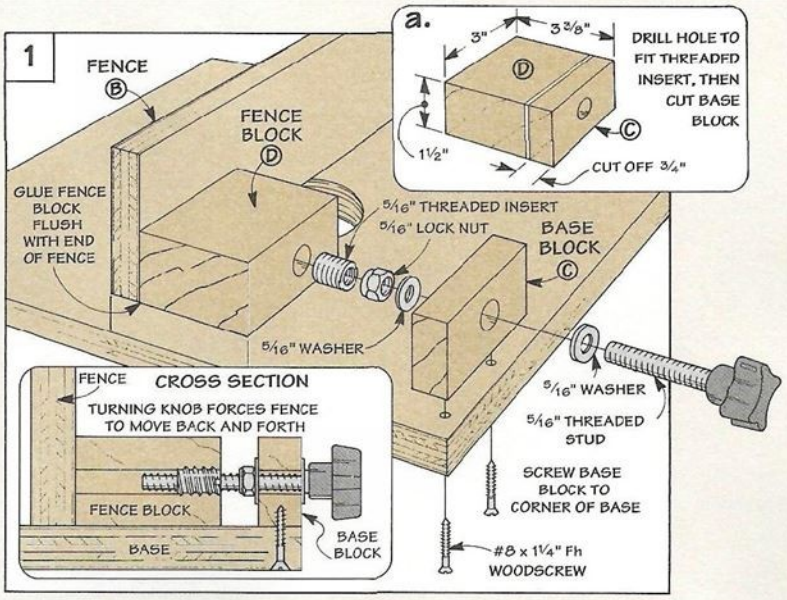

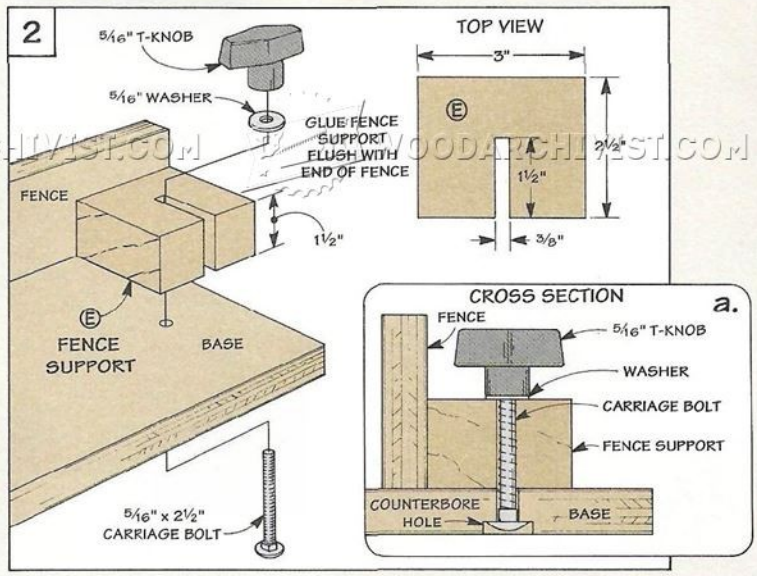

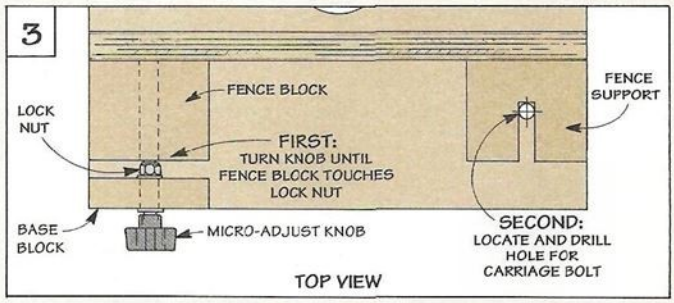

Dust Collector

Once you've attached the fence assembly to the base, the next step is to add the dust collector.

The dust collector is basically a box with an open end that faces the drum sander. A hole in the back is sized to fit the hose on your shop vacuum, see Fig. 4.

The bottom of the box extends beyond the sides so slots can be cut in the bottom to allow the collector to be easily positioned or removed.

EXTENSIONS. To help concentrate the vacuum suction and allow a clear view of the workpiece, I added a pair of Plexiglas extensions, see Fig. 5.

These extensions also act as guards to keep your fingers away from the rotating drum.

FEATHERBOARDS. By making one extension longer than the other and mounting the collector at an angle, the extensions work like featherboards. This way they press the workpiece tight against the fence, refer to Fig. 4a.

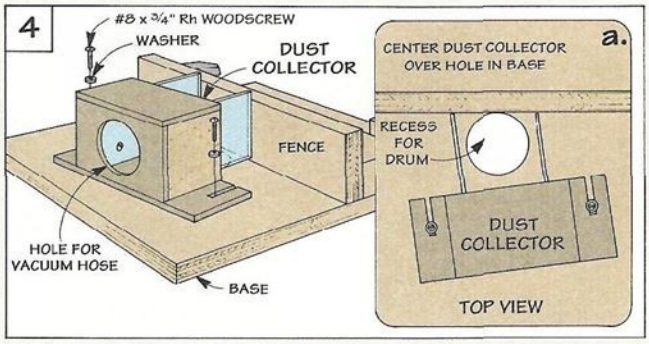

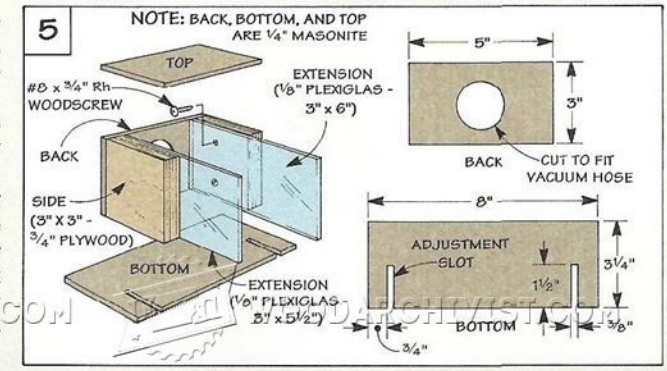

Using the Thickness Sanding Jig

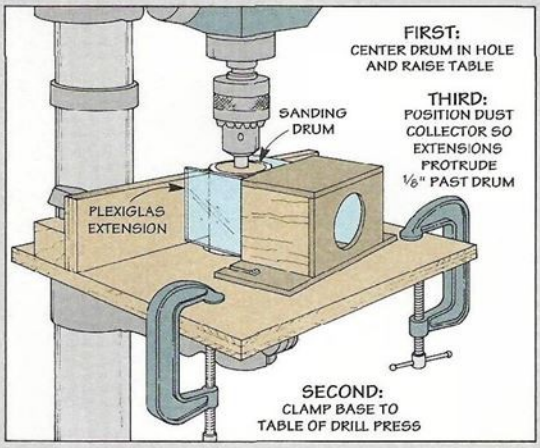

▲ ***Step 1:*** *Start by centering the sanding drum over the hole in the base. Then raise the table and clamp the base to it. Next, position the dust collector on the base so the extensions protrude about 1/8" past the drum sander.*

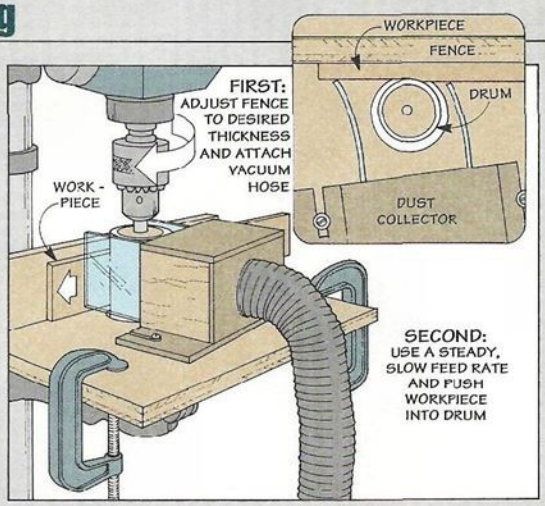

▲ ***Step 2:*** *Now you can adjust the fence to the desired thickness by using the micro-adjuster. Attach the vacuum hose, and then feed the workpiece slowly into the drum. Use a constant, even feed rate.*

Shop-Made Drum Sander

Most drum sanders have a body made out of flexible rubber. When a sanding sleeve is slipped over the rubber body and the drum is tightened, the center of the drum bows out. As the workpiece is fed between the fence and the drum, this bow "dishes out" the workpiece.

To solve this problem, I use a shop-made drum sander. It's just a piece of PVC pipe with a strip of adhesive-backed sandpaper wrapped around it, see photo.

THE SHAFT. The *shaft* of the drum sander is a 6"-long, 3/8" carriage bolt with the threads cut off, see Fig. 1.

THE CORE. For the *core*, I used five 2"-diameter flat toy wheels. These wheels fit perfectly inside 2" PVC and have a center hole that fits the shaft, see Fig. 1.

THE PIPE. The PVC pipe provides straight walls that won't bow out. Cut it to match the combined height of the wheels, see Fig. 1. Then epoxy the shaft in the core, and the core in the pipe, see Fig. 1.

TRUE UP THE DRUM. To true up the drum, first attach a strip of sandpaper to a piece of 1/4" Masonite. Then adjust the fence on the sanding jig to 1/4" and feed the Masonite (with sandpaper facing out) into the rotating drum, see Fig. 2. Repeat as necessary, adjusting the fence between passes until the drum is round.

SANDING SLEEVE. The sanding sleeve is just a piece of adhesive-backed sandpaper that's cut to match the height (width) of the drum, see Figs. 3 and 3a.

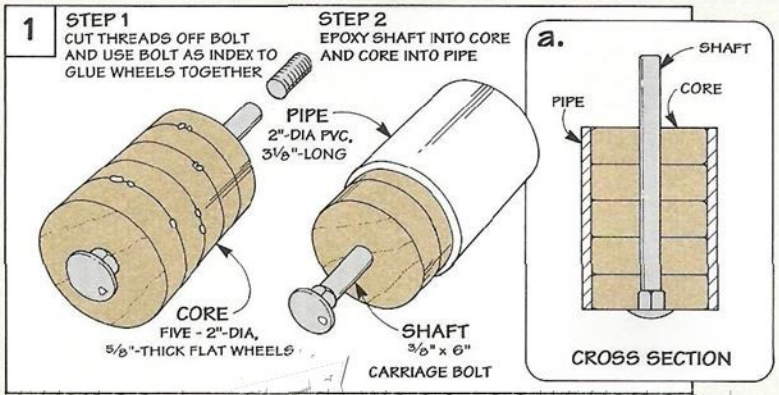
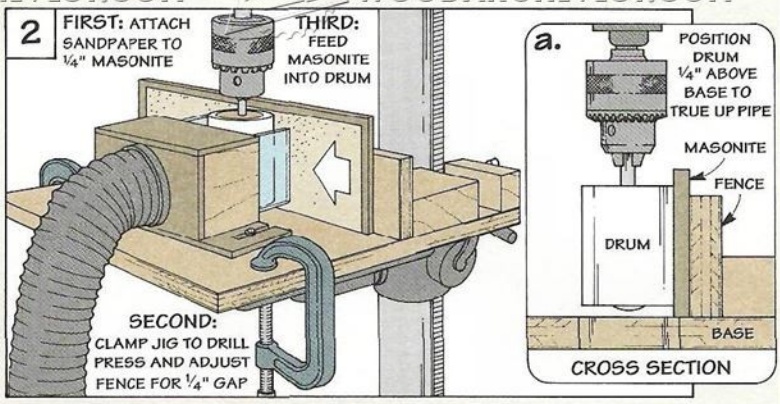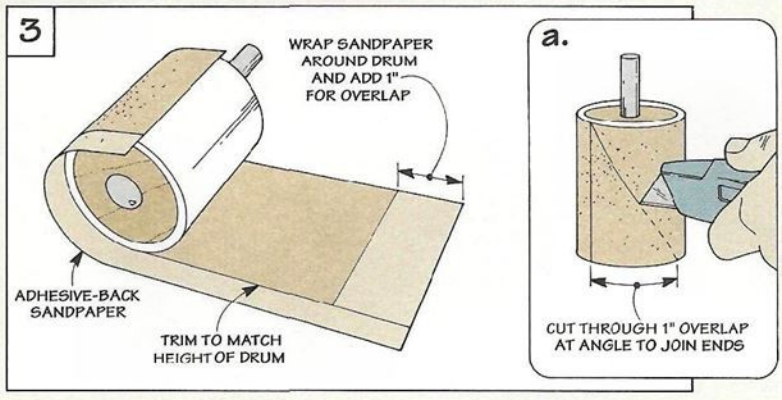
WOODARCHIVIST.COM